VAHVA GRAPPLE
C, E and KC
42, 46, 46 HD, 50, 60 HD

Spare Parts Book

Version 30.9.2026 (English)

Table of contents

1 General 3

2 Spare parts drawing 4

2.1 Grapple 4

2.2 Removal jaws 5

3 Spare parts lists 6

3.1 VAHVA GRAPPLE C42 6

3.2 VAHVA GRAPPLE C42 E5 6

3.3 VAHVA GRAPPLE KC42 E5 NTP10 7

3.4 VAHVA GRAPPLE KC42 E5 NTP 20/30 7

3.5 VAHVA GRAPPLE KC42 E5 S60 8

3.6 VAHVA GRAPPLE KC42 E5 S70 8

3.7 VAHVA GRAPPLE KC42 E9 NTP10 9

3.8 VAHVA GRAPPLE KC42 E9 NTP20 9

3.9 VAHVA GRAPPLE KC42 E9 S60 10

3.10 VAHVA GRAPPLE KC42 E9 S70 10

3.11 VAHVA GRAPPLE C46 11

3.12 VAHVA GRAPPLE C46 HD 11

3.13 VAHVA GRAPPLE C46 E4 12

3.14 VAHVA GRAPPLE KC46 NTP10 12

3.15 VAHVA GRAPPLE KC46 NTP 20/30 13

3.16 VAHVA GRAPPLE KC46 S60 13

3.17 VAHVA GRAPPLE KC46 S70 14

3.18 VAHVA GRAPPLE KC46 E4 NTP10 14

3.19 VAHVA GRAPPLE KC46 E4 NTP20/30 15

3.20 VAHVA GRAPPLE KC46 E4 S60 15

3.21 VAHVA GRAPPLE KC46 E4 S70 16

3.22 VAHVA REMOVAL JAWS for C42 E9 GRAPPLE 16

3.23 VAHVA GRAPPLE C50 17

3.24 VAHVA GRAPLE C60 HD 17

4 Hydraulic cylinder repair 19

4.1 Hydraulic cylinder removal and installation 19

4.2 Hydraulic cylinder seals replacement 19

1 General

This manual describes the spare parts used for VAHVA grapple.

The book provides you necessary information about the structure and operation of our product to use and maintain the device properly.

For the most demanding repair and maintenance work, we recommend contacting Koneosapalvelu or your grapple dealer. Our service staff has the experience and special tools needed for more demanding jobs.

The C models in our VAHVA collection are designed to be mounted on a rotator and the KC models are quick-mounted on an excavator. If the model marking also includes an E, the grapple has spikes instead of jaws. The digit after E indicates the number of spikes.

VAHVA original spare parts are sold by Koneosapalvelu Oy.

Contact information for spare parts sales:

Koneosapalvelu Kuopio
Saaristokatu 5
tel. +358 20 755 1243

Koneosapalvelu Lappeenranta
Toikansuontie 7
tel. +358 20 755 1245

Koneosapalvelu Vilppula
Teollisuustie 5
tel. +358 20 755 1240

2 Spare parts drawing

2.1 Grapple

The pictures and drawings below are for reference only.

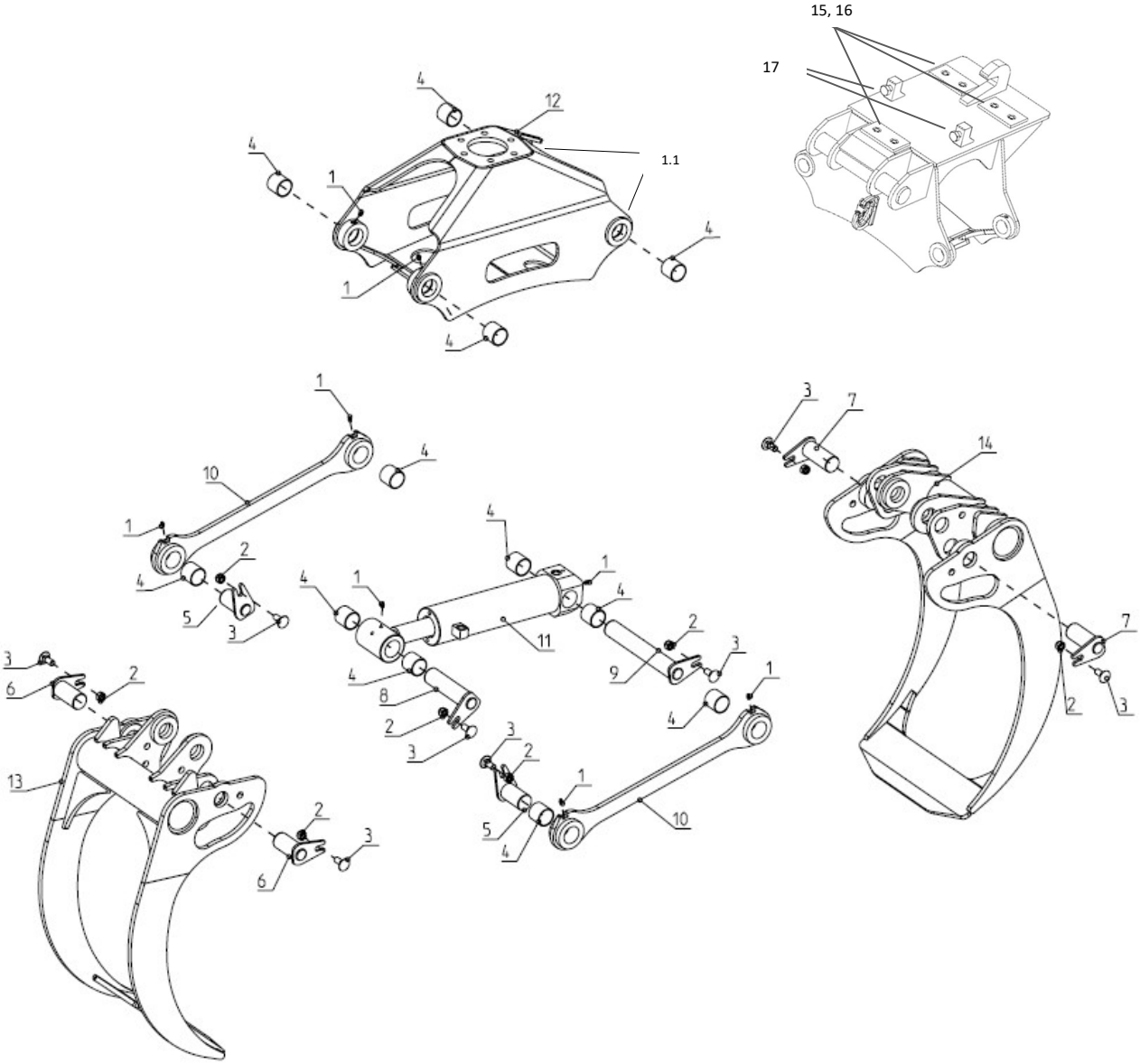

2.2 Removal jaws

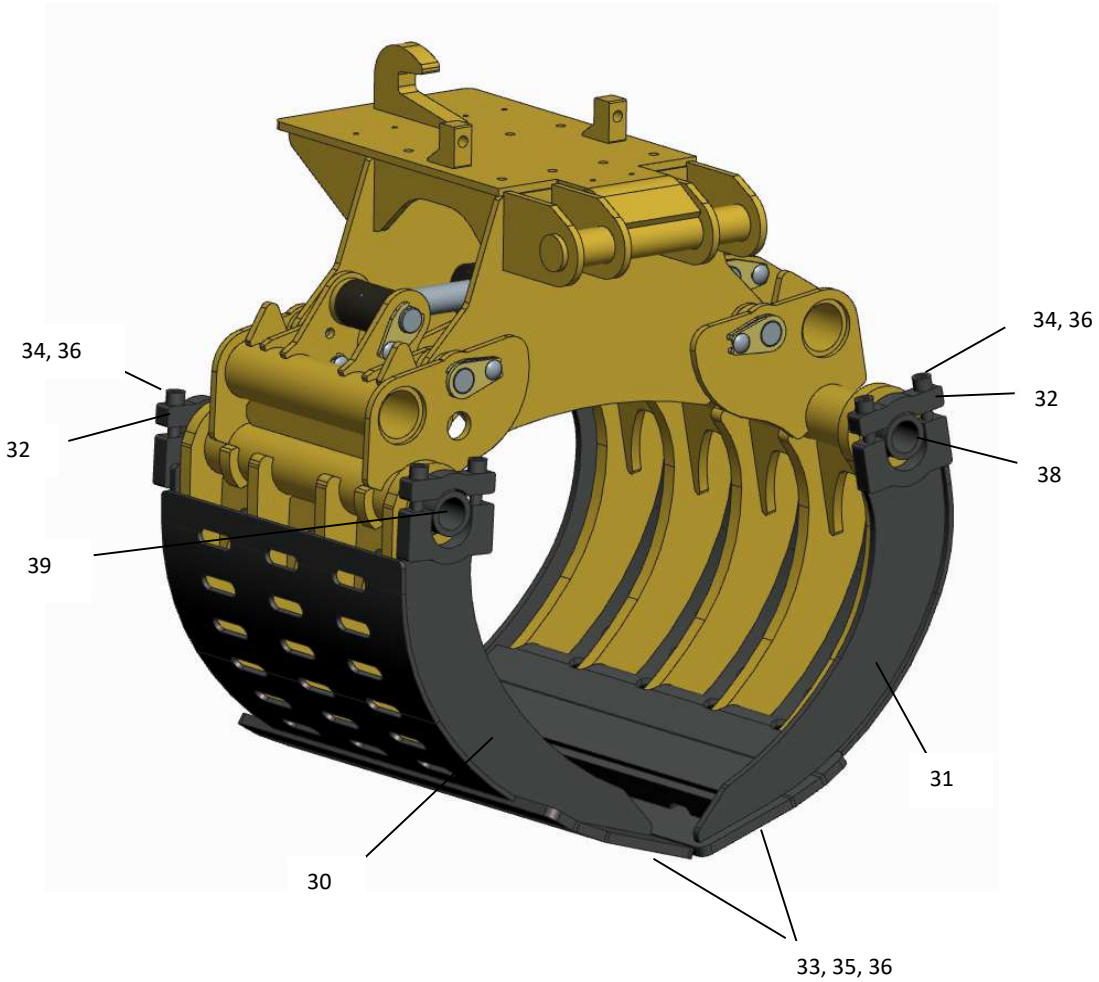

3 Spare parts lists

3.1 VAHVA GRAPPLE C42

Part	Order code	Part No.	Name	Amount	Unit
	A26764	**V800000**	**VAHVA GRAPPLE C42**	**1**	**pcs**
	A61185	**V600090**	**PIN GROUP 1 C4x**	**1**	**pcs**
1	A13827	TRM1167	GREASE NIPPLE M8x1 DIRECT	8	pcs
2	A13618	TZN1017	HEX LOCK NUT M16 DIN985 10.9	8	pcs
3	A61154	TRE2165	PAN HEAD SCREW M16*40 DIN 7380	8	pcs
4	A19760	A19760	BEARING 50/55*50 WB802	8*	pcs
5	A29985	V600082	PIN D50*101	2	pcs
6	A28914	V600074	PIN D50*111	2	pcs
7	A28915	V600080	PIN D50*131	2	pcs
8	A28912	V600078	PIN D50*208	1	pcs
9	A28913	V600076	PIN D50*340	1	pcs
10	**A27273**	**V600425**	**PUSHROD C42/ C46, PL20**	**2**	**pcs**
11	**A70532**	**V600201**	**HYDRAULIC CYLINDER 110/63*331**	**1**	**pcs**
12	**A60335**	**V600010**	**FRAME C42/C46**	**1**	**pcs**
13	**A94822**	**V810030**	**INNER GRAPPLE ARM C42**	**1**	**pcs**
14	**A60365**	**V800020**	**OUTER GRAPPLE ARM C42**	**1**	**pcs**

3.2 VAHVA GRAPPLE C42 E5

Part	Order code	Part No.	Name	Amount	Unit
	A27692	**V600700**	**VAHVA GRAPPLE C42 E5**	**1**	**pcs**
	A61188	**V600790**	**PIN GROUP 5 E9**	**1**	**pcs**
1.1	A13825	TRM1170	GREASE NIPPLE M8x1 45 ast.	2	pcs
1	A13827	TRM1167	GREASE NIPPLE M8x1 DIRECT	8	pcs
2	A13618	TZN1017	HEX LOCK NUT M16 DIN985 10.9	8	pcs
3	A61154	TRE2165	PAN HEAD SCREW M16*40 DIN 7380	8	pcs
4	A19760	A19760	BEARING 50/55*50 WB802	8*	pcs
5	A29985	V600082	PIN D50*101	2	pcs
6	A28914	V600074	PIN D50*111	2	pcs
8	A28912	V600078	PIN D50*208	1	pcs
9	A28913	V600076	PIN D50*340	1	pcs
7	A60333	V600095	PIN D50*131 GREASE NIPPLE	2	pcs
10	**A27273**	**V600425**	**PUSHROD C42/ C46, PL20**	**2**	**pcs**
11	**A70532**	**V600201**	**HYDRAULIC CYLINDER 110/63*331**	**1**	**pcs**
12	**A59957**	**V600610**	**FRAME C42/C46 HD**	**1**	**pcs**
14	**A60367**	**V600720**	**OUTER GRAPPLE ARM C42 E5**	**1**	**pcs**
13	**A60368**	**V600730**	**INNER GRAPPLE ARM C42 E5**	**1**	**pcs**

3.3 VAHVA GRAPPLE KC42 E5 NTP10

Part	Order code	Part No.	Name	Amount	Unit
	A29612	**V600750**	**VAHVA GRAPPLE KC42 E5 NTP10**	**1**	**pcs**
	A61188	**V600790**	**PIN GROUP 5 E9**	**1**	**pcs**
1.1	A13825	TRM1170	GREASE NIPPLE M8x1 45 ast.	2	pcs
1	A13827	TRM1167	GREASE NIPPLE M8x1 DIRECT	8	pcs
2	A13618	TZN1017	HEX LOCK NUT M16 DIN985 10.9	8	pcs
3	A61154	TRE2165	PAN HEAD SCREW M16*40 DIN 7380	8	pcs
4	A19760	A19760	BEARING 50/55*50 WB802	8*	pcs
5	A29985	V600082	PIN D50*101	2	pcs
6	A28914	V600074	PIN D50*111	2	pcs
8	A28912	V600078	PIN D50*208	1	pcs
9	A28913	V600076	PIN D50*340	1	pcs
7	A60333	V600095	PIN D50*131 GREASE NIPPLE	2	pcs
10	**A27273**	**V600425**	**PUSHROD C42/ C46, PL20**	**2**	**pcs**
11	**A70532**	**V600201**	**HYDRAULIC CYLINDER 110/63*331**	**1**	**pcs**
12	**A60336**	**V600410**	**FRAME KC42/C46 NTP10**	**1**	**pcs**
14	**A60367**	**V600720**	**OUTER GRAPPLE ARM C42 E5**	**1**	**pcs**
13	**A60368**	**V600730**	**INNER GRAPPLE ARM C42 E5**	**1**	**pcs**
15	A32769	V600344	COVER PLATE KC36 NTP10	3	pcs
16	TRT2123	TRT2123	HEX SCREW M12*30 DIN 933 10.9	6	pcs
17	A63344	TRT1247	HEX SCREW M24*70 DIN 933 8.8	2	pcs

3.4 VAHVA GRAPPLE KC42 E5 NTP 20/30

Part	Order code	Part No.	Name	Amount	Unit
	A29613	**V600760**	**VAHVA GRAPPLE KC42 E5 NTP 20/30**	**1**	**pcs**
	A61188	**V600790**	**PIN GROUP 5 E9**	**1**	**pcs**
1.1	A13825	TRM1170	GREASE NIPPLE M8x1 45 ast.	2	pcs
1	A13827	TRM1167	GREASE NIPPLE M8x1 DIRECT	8	pcs
2	A13618	TZN1017	HEX LOCK NUT M16 DIN985 10.9	8	pcs
3	A61154	TRE2165	PAN HEAD SCREW M16*40 DIN 7380	8	pcs
4	A19760	A19760	BEARING 50/55*50 WB802	8*	pcs
5	A29985	V600082	PIN D50*101	2	pcs
6	A28914	V600074	PIN D50*111	2	pcs
8	A28912	V600078	PIN D50*208	1	pcs
9	A28913	V600076	PIN D50*340	1	pcs
7	A60333	V600095	PIN D50*131 GREASE NIPPLE	2	pcs
10	**A27273**	**V600425**	**PUSHROD C42/ C46, PL20**	**2**	**pcs**
11	**A70532**	**V600201**	**HYDRAULIC CYLINDER 110/63*331**	**1**	**pcs**
12	**A60337**	**V600891**	**FRAME KC42/C46 NTP20/30**	**1**	**pcs**

14	**A60367**	**V600720**	**OUTER GRAPPLE ARM C42 E5**	**1**	**pcs**
13	**A60368**	**V600730**	**INNER GRAPPLE ARM C42 E5**	**1**	**pcs**
15	A32769	V600344	COVER PLATE, KC36 NTP10	3	pcs
17	TRT2123	TRT1247	HEX SCREW M24*70 DIN 933 8.8	2	pcs
16	A63344	TRT2123	HEX SCREW M12*30 DIN 933 10.9	6	pcs

3.5 VAHVA GRAPPLE KC42 E5 S60

Part	Order code	Part No.	Name	Amount	Unit
	A29614	**V600770**	**VAHVA GRAPPLE KC42 E5 S60**	**1**	**pcs**
	A61188	**V600790**	**PIN GROUP 5 E9**	**1**	**pcs**
1.1	A13825	TRM1170	GREASE NIPPLE M8x1 45 ast.	2	pcs
1	A13827	TRM1167	GREASE NIPPLE M8x1 DIRECT	8	pcs
2	A13618	TZN1017	HEX LOCK NUT M16 DIN985 10.9	8	pcs
3	A61154	TRE2165	PAN HEAD SCREW M16*40 DIN 7380	8	pcs
4	A19760	A19760	BEARING 50/55*50 WB802	8*	pcs
5	A29985	V600082	PIN D50*101	2	pcs
6	A28914	V600074	PIN D50*111	2	pcs
8	A28912	V600078	PIN D50*208	1	pcs
9	A28913	V600076	PIN D50*340	1	pcs
7	A60333	V600095	PIN D50*131 GREASE NIPPLE	2	pcs
10	**A27273**	**V600425**	**PUSHROD C42/ C46, PL20**	**2**	**pcs**
11	**A70532**	**V600201**	**HYDRAULIC CYLINDER 110/63*331**	**1**	**pcs**
12	**A60338**	**V600881**	**FRAME KC42/C46 S60**	**1**	**pcs**
14	**A60367**	**V600720**	**OUTER GRAPPLE ARM C42 E5**	**1**	**pcs**
13	**A60368**	**V600730**	**INNER GRAPPLE ARM C42 E5**	**1**	**pcs**

3.6 VAHVA GRAPPLE KC42 E5 S70

Part	Order code	Part No.	Name	Amount	Unit
	A29615	**V600780**	**VAHVA GRAPPLE KC42 E5 S70**	**1**	**pcs**
11	**A70532**	**V600201**	**HYDRAULIC CYLINDER 110/63*331**	**1**	**pcs**
10	**A27273**	**V600425**	**PUSHROD C42/ C46, PL20**	**2**	**pcs**
12	**A60339**	**V600871**	**FRAME KC42/C46 S70**	**1**	**pcs**
14	**A60367**	**V600720**	**OUTER GRAPPLE ARM C42 E5**	**1**	**pcs**
13	**A60368**	**V600730**	**INNER GRAPPLE ARM C42 E5**	**1**	**pcs**
	A61188	**V600790**	**PIN GROUP 5 E9**	**1**	**pcs**
1.1	A13825	TRM1170	GREASE NIPPLE M8x1 45 ast.	2	pcs
1	A13827	TRM1167	GREASE NIPPLE M8x1 DIRECT	8	pcs
2	A13618	TZN1017	HEX LOCK NUT M16 DIN985 10.9	8	pcs
3	A61154	TRE2165	PAN HEAD SCREW M16*40 DIN 7380	8	pcs
4	A19760	A19760	BEARING 50/55*50 WB802	8*	pcs
5	A29985	V600082	PIN D50*101	2	pcs

6	A28914	V600074	PIN D50*111	2	pcs
8	A28912	V600078	PIN D50*208	1	pcs
9	A28913	V600076	PIN D50*340	1	pcs
7	A60333	V600095	PIN D50*131 GREASE NIPPLE	2	pcs

3.7 VAHVA GRAPPLE KC42 E9 NTP10

Part	Order code	Part No.	Name	Amount	Unit
	A28593	**V600860**	**VAHVA GRAPPLE KC42 E9 NTP10**	**1**	**pcs**
10	**A27273**	**V600425**	**PUSHROD C42/ C46, PL20**	**2**	**pcs**
12	**A60336**	**V600410**	**FRAME KC42/C46 NTP10**	**1**	**pcs**
14	**A60369**	**V800720**	**OUTER GRAPPLE ARM C42 E9 pl 40**	**1**	**pcs**
13	**A60370**	**V800730**	**INNER GRAPPLE ARM C42 E9 pl 40**	**1**	**pcs**
11	**A70532**	**V600201**	**HYDRAULIC CYLINDER 110/63*331**	**1**	**pcs**
	A61188	**V600790**	**PIN GROUP 5 E9**	**1**	**pcs**
1.1	A13825	TRM1170	GREASE NIPPLE M8x1 45 ast.	2	pcs
1	A13827	TRM1167	GREASE NIPPLE M8x1 DIRECT	8	pcs
2	A13618	TZN1017	HEX LOCK NUT M16 DIN985 10.9	8	pcs
3	A61154	TRE2165	PAN HEAD SCREW M16*40 DIN 7380	8	pcs
4	A19760	A19760	BEARING 50/55*50 WB802	8*	pcs
5	A29985	V600082	PIN D50*101	2	pcs
6	A28914	V600074	PIN D50*111	2	pcs
8	A28912	V600078	PIN D50*208	1	pcs
9	A28913	V600076	PIN D50*340	1	pcs
7	A60333	V600095	PIN D50*131 GREASE NIPPLE	2	pcs
15	A32769	V600344	COVER PLATE KC36 NTP10	3	pcs
16	A63344	TRT2123	HEX SCREW M12*30 DIN 933 10.9	6	pcs
17	TRT2123	TRT1247	HEX SCREW M24*70 DIN 933 8.8	2	pcs

3.8 VAHVA GRAPPLE KC42 E9 NTP20

Part	Order code	Part No.	Name	Amount	Unit
	A29616	**V600890**	**VAHVA GRAPPLE KC42 E9 NTP20**	**1**	**pcs**
12	**A60337**	**V600891**	**FRAME KC42/C46 NTP20/30**	**1**	**pcs**
10	**A27273**	**V600425**	**PUSHROD C42/ C46, PL20**	**2**	**pcs**
14	**A60369**	**V800720**	**OUTER GRAPPLE C42 E9 pl 40**	**1**	**pcs**
13	**A60370**	**V800730**	**INNER GRAPPLE C42 E9 pl 40**	**1**	**pcs**
11	**A70532**	**V600201**	**HYDRAULIC CYLINDER 110/63*331**	**1**	**pcs**
	A61188	**V600790**	**PIN GROUP 5 E9**	**1**	**pcs**
1.1	A13825	TRM1170	GREASE NIPPLE M8x1 45 ast.	2	pcs
1	A13827	TRM1167	GREASE NIPPLE M8x1 DIRECT	8	pcs
2	A13618	TZN1017	HEX LOCK NUT M16 DIN985 10.9	8	pcs
3	A61154	TRE2165	PAN HEAD SCREW M16*40 DIN 7380	8	pcs

4	A19760	A19760	BEARING 50/55*50 WB802	8*	pcs
5	A29985	V600082	PIN D50*101	2	pcs
6	A28914	V600074	PIN D50*111	2	pcs
8	A28912	V600078	PIN D50*208	1	pcs
9	A28913	V600076	PIN D50*340	1	pcs
7	A60333	V600095	PIN D50*131 GREASE NIPPLE	2	pcs
15	A32769	V600344	COVER PLATE KC36 NTP10	3	pcs
16	A63344	TRT2123	HEX SCREW M12*30 DIN 933 10.9	6	pcs
17	TRT2123	TRT1247	HEX SCREW M24*70 DIN 933 8.8	2	pcs

3.9 VAHVA GRAPPLE KC42 E9 S60

Part	Order code	Part No.	Name	Amount	Unit
	A28594	**V600880**	**VAHVA GRAPPLE KC42 E9 S60**	**1**	**pcs**
10	**A27273**	**V600425**	**PUSHROD C42/ C46, PL20**	**2**	**pcs**
12	**A60338**	**V600881**	**FRAME KC42/C46 S60**	**1**	**pcs**
14	**A60369**	**V800720**	**OUTER GRAPPLE ARM C42 E9 pl 40**	**1**	**pcs**
13	**A60370**	**V800730**	**INNER GRAPPLE ARM C42 E9 pl 40**	**1**	**pcs**
11	**A70532**	**V600201**	**HYDRAULIC CYLINDER 110/63*331**	**1**	**pcs**
	A61188	**V600790**	**PIN GROUP 5 E9**	**1**	**pcs**
1.1	A13825	TRM1170	GREASE NIPPLE M8x1 45 ast.	2	pcs
1	A13827	TRM1167	GREASE NIPPLE M8x1 DIRECT	8	pcs
2	A13618	TZN1017	HEX LOCK NUT M16 DIN985 10.9	8	pcs
3	A61154	TRE2165	PAN HEAD SCREW M16*40 DIN 7380	8	pcs
4	A19760	A19760	BEARING 50/55*50 WB802	8*	pcs
5	A29985	V600082	PIN D50*101	2	pcs
6	A28914	V600074	PIN D50*111	2	pcs
8	A28912	V600078	PIN D50*208	1	pcs
9	A28913	V600076	PIN D50*340	1	pcs
7	A60333	V600095	PIN D50*131 GREASE NIPPLE	2	pcs

3.10 VAHVA GRAPPLE KC42 E9 S70

Part	Order code	Part No	Name	Amount	Unit
	A28595	**V600870**	**VAHVA GRAPPLE KC42 E9 S70**	**1**	**pcs**
10	**A27273**	**V600425**	**PUSHROD C42/ C46, PL20**	**2**	**pcs**
12	**A60339**	**V600871**	**FRAME KC42/C46 S70**	**1**	**pcs**
14	**A60369**	**V800720**	**OUTER GRAPPLE ARM C42 E9 pl 40**	**1**	**pcs**
13	**A60370**	**V800730**	**INNER GRAPPLE ARM C42 E9 pl 40**	**1**	**pcs**
11	**A70532**	**V600201**	**HYDRAULIC CYLINDER 110/63*331**	**1**	**pcs**
	A61188	**V600790**	**PIN GROUP 5 E9**	**1**	**pcs**
1.1	A13825	TRM1170	GREASE NIPPLE M8x1 45 ast.	2	pcs
1	A13827	TRM1167	GREASE NIPPLE M8x1 DIRECT	8	pcs

2	A13618	TZN1017	HEX LOCK NUT M16 DIN985 10.9	8	pcs
3	A61154	TRE2165	PAN HEAD SCREW M16*40 DIN 7380	8	pcs
4	A19760	A19760	BEARING 50/55*50 WB802	8*	pcs
5	A29985	V600082	PIN D50*101	2	pcs
6	A28914	V600074	PIN D50*111	2	pcs
8	A28912	V600078	PIN D50*208	1	pcs
9	A28913	V600076	PIN D50*340	1	pcs
7	A60333	V600095	PIN D50*131 GREASE NIPPLE	2	pcs

3.11VAHVA GRAPPLE C46

Part	Order code	Part No.	Name	Amount	Unit
	A26762	**V600000**	**VAHVA GRAPPLE C46**	**1**	**pcs**
	A61185	**V600090**	**PIN GROUP 1 C4x**	**1**	**pcs**
1	A13827	TRM1167	GREASE NIPPLE M8x1 DIRECT	8	pcs
2	A13618	TZN1017	HEX LOCK NUT M16 DIN985 10.9	8	pcs
3	A61154	TRE2165	PAN HEAD SCREW M16*40 DIN 7380	8	pcs
4	A19760	A19760	BEARING 50/55*50 WB802	8*	pcs
5	A29985	V600082	PIN D50*101	2	pcs
6	A28914	V600074	PIN D50*111	2	pcs
7	A28915	V600080	PIN D50*131	2	pcs
8	A28912	V600078	PIN D50*208	1	pcs
9	A28913	V600076	PIN D50*340	1	pcs
10	**A27273**	**V600425**	**PUSHROD C42/ C46, PL20**	**2**	**pcs**
11	**A70532**	**V600201**	**HYDRAULIC CYLINDER 110/63*331**	**1**	**pcs**
12	**A60335**	**V600010**	**FRAME C42/C46**	**1**	**pcs**
13	**A95251**	**V610030**	**INNER GRAPPLE ARM C46**	**1**	**pcs**
14	**A32326**	**V600020**	**OUTER GRAPPLE ARM C46**	**1**	**pcs**

3.12 VAHVA GRAPPLE C46 HD

Part	Order code	Part No.	Name	Amount	Unit
	A30308	**V600800**	**VAHVA GRAPPLE C46 HD**	**1**	**pcs**
	A61185	**V600090**	**PIN GROUP 1 C4x**	**1**	**pcs**
1	A13827	TRM1167	GREASE NIPPLE M8x1 DIRECT	8	pcs
2	A13618	TZN1017	HEX LOCK NUT M16 DIN985 10.9	8	pcs
3	A61154	TRE2165	PAN HEAD SCREW M16*40 DIN 7380	8	pcs
4	A19760	A19760	BEARING 50/55*50 WB802	8*	pcs
5	A29985	V600082	PIN D50*101	2	pcs
6	A28914	V600074	PIN D50*111	2	pcs
7	A28915	V600080	PIN D50*131	2	pcs
8	A28912	V600078	PIN D50*208	1	pcs
9	A28913	V600076	PIN D50*340	1	pcs

11	**A70532**	**V600201**	**HYDRAULIC CYLINDER 110/63*331**	**1**	**pcs**
10	**A27273**	**V600425**	**PUSHROD C42/ C46, PL20**	**2**	**pcs**
12	**A59957**	**V600610**	**FRAME C42/C46 HD**	**1**	**pcs**
14	**A60371**	**V601020**	**OUTER GRAPPLE ARM C46 HD**	**1**	**pcs**
13	**A60372**	**V601030**	**INNER GRAPPLE ARM C46 HD**	**1**	**pcs**

3.13 VAHVA GRAPPLE C46 E4

Part	Order code	Part No.	Name	Amount	Unit
	A27494	**V600600**	**VAHVA GRAPPLE C46 E4**	**1**	**pcs**
	A61187	**V600690**	**PIN GROUP 4 C46 E4**	**1**	**pcs**
1	A13827	TRM1167	GREASE NIPPLE M8x1 DIRECT	8	pcs
2	A13618	TZN1017	HEX LOCK NUT M16 DIN985 10.9	8	pcs
3	A61154	TRE2165	PAN HEAD SCREW M16*40 DIN 7380	8	pcs
4	A19760	A19760	BEARING 50/55*50 WB802	8*	pcs
5	A29985	V600082	PIN D50*101	2	pcs
6	A28914	V600074	PIN D50*111	2	pcs
7	A28916	V600084	PIN D50*143	2	pcs
8	A28912	V600078	PIN D50*208	1	pcs
9	A28913	V600076	PIN D50*340	1	pcs
10	**A27273**	**V600425**	**PUSHROD C42/ C46, PL20**	**2**	**pcs**
11	**A70532**	**V600201**	**HYDRAULIC CYLINDER 110/63*331**	**1**	**pcs**
12	**A59957**	**V600610**	**FRAME C42/C46 HD**	**1**	**pcs**
14	**A33842**	**V600620**	**OUTER GRAPPLE ARM C46 E4**	**1**	**pcs**
13	**A33841**	**V600630**	**INNER GRAPPLE ARM C46 E4**	**1**	**pcs**

3.14 VAHVA GRAPPLE KC46 NTP10

Part	Order code	Part No.	Name	Amount	Unit
	A29608	**V600500**	**VAHVA GRAPPLE KC46 NTP10 HD Jaws**	**1**	**pcs**
	A61185	**V600090**	**PIN GROUP 1 C4x**	**1**	**pcs**
1	A13827	TRM1167	GREASE NIPPLE M8x1 DIRECT	8	pcs
2	A13618	TZN1017	HEX LOCK NUT M16 DIN985 10.9	8	pcs
3	A61154	TRE2165	PAN HEAD SCREW M16*40 DIN 7380	8	pcs
4	A19760	A19760	BEARING 50/55*50 WB802	8*	pcs
5	A29985	V600082	PIN D50*101	2	pcs
6	A28914	V600074	PIN D50*111	2	pcs
7	A28915	V600080	PIN D50*131	2	pcs
8	A28912	V600078	PIN D50*208	1	pcs
9	A28913	V600076	PIN D50*340	1	pcs
10	**A27273**	**V600425**	**PUSHROD C42/ C46, PL20**	**2**	**pcs**
11	**A70532**	**V600201**	**HYDRAULIC CYLINDER 110/63*331**	**1**	**pcs**
12	**A60336**	**V600410**	**FRAME KC42/C46 NTP10**	**1**	**pcs**

14	**A60371**	**V601020**	**OUTER GRAPPLE ARM C46 HD**	**1**	**pcs**
13	**A60372**	**V601030**	**INNER GRAPPLE ARM C46 HD**	**1**	**pcs**
15	A32769	V600344	COVER PLATE, KC36 NTP10	3	pcs
16	TRT2123	TRT2123	HEX SCREW M12*30 DIN 933 10.9	6	pcs
17	A63344	TRT1247	HEX SCREW M24*70 DIN 933 8.8	2	pcs

3.15 VAHVA GRAPPLE KC46 NTP 20/30

Part	Order code	Part No.	Name	Amount	Unit
	A29609	**V600550**	**VAHVA GRAPPLE KC46 NTP 20/30 HD Jaws**	**1**	**pcs**
	A61185	**V600090**	**PIN GROUP 1 C4x**	**1**	**pcs**
1	A13827	TRM1167	GREASE NIPPLE M8x1 DIRECT	8	pcs
2	A13618	TZN1017	HEX LOCK NUT M16 DIN985 10.9	8	pcs
3	A61154	TRE2165	PAN HEAD SCREW M16*40 DIN 7380	8	pcs
4	A19760	A19760	BEARING 50/55*50 WB802	8*	pcs
5	A29985	V600082	PIN D50*101	2	pcs
6	A28914	V600074	PIN D50*111	2	pcs
7	A28915	V600080	PIN D50*131	2	pcs
8	A28912	V600078	PIN D50*208	1	pcs
9	A28913	V600076	PIN D50*340	1	pcs
10	**A27273**	**V600425**	**PUSHROD C42/ C46, PL20**	**2**	**pcs**
11	**A70532**	**V600201**	**HYDRAULIC CYLINDER 110/63*331**	**1**	**pcs**
12	**A60337**	**V600891**	**FRAME KC42/C46 NTP20/30**	**1**	**pcs**
14	**A60371**	**V601020**	**OUTER GRAPPLE ARM C46 HD**	**1**	**pcs**
13	**A60372**	**V601030**	**INNER GRAPPLE ARM C46 HD**	**1**	**pcs**
15	A32769	V600344	COVER PLATE, KC36 NTP10	3	pcs
16	TRT2123	TRT2123	HEX SCREW M12*30 DIN 933 10.9	6	pcs
17	A63344	TRT1247	HEX SCREW M24*70 DIN 933 8.8	2	pcs

3.16 VAHVA GRAPPLE KC46 S60

Part	Order code	Part No.	Name	Amount	Unit
	A29887	**V600560**	**VAHVA GRAPPLE KC46 S60 HD Jaws**	**1**	**pcs**
	A61185	**V600090**	**PIN GROUP 1 C4x**	**1**	**pcs**
1	A13827	TRM1167	GREASE NIPPLE M8x1 DIRECT	8	pcs
2	A13618	TZN1017	HEX LOCK NUT M16 DIN985 10.9	8	pcs
3	A61154	TRE2165	PAN HEAD SCREW M16*40 DIN 7380	8	pcs
4	A19760	A19760	BEARING 50/55*50 WB802	8*	pcs
5	A29985	V600082	PIN D50*101	2	pcs
6	A28914	V600074	PIN D50*111	2	pcs
7	A28915	V600080	PIN D50*131	2	pcs
8	A28912	V600078	PIN D50*208	1	pcs
9	A28913	V600076	PIN D50*340	1	pcs

10	**A27273**	**V600425**	**PUSHROD C42/ C46, PL20**	**2**	**pcs**
11	**A70532**	**V600201**	**HYDRAULIC CYLINDER 110/63*331**	**1**	**pcs**
12	**A60338**	**V600881**	**FRAME KC42/C46 S60**	**1**	**pcs**
14	**A60371**	**V601020**	**OUTER GRAPPLE ARM C46 HD**	**1**	**pcs**
13	**A60372**	**V601030**	**INNER GRAPPLE ARM C46 HD**	**1**	**pcs**

3.17 VAHVA GRAPPLE KC46 S70

Part	Order code	Part No.	Name	Amount	Unit
	A29888	**V600570**	**VAHVA GRAPPLE KC46 S70 HD Jaws**	**1**	**pcs**
10	**A27273**	**V600425**	**PUSHROD C42/ C46, PL20**	**2**	**pcs**
11	**A70532**	**V600201**	**HYDRAULIC CYLINDER 110/63*331**	**1**	**pcs**
12	**A60339**	**V600871**	**FRAME KC42/C46 S70**	**1**	**pcs**
14	**A60371**	**V601020**	**OUTER GRAPPLE ARM C46 HD**	**1**	**pcs**
13	**A60372**	**V601030**	**INNER GRAPPLE ARM C46 HD**	**1**	**pcs**
	A61185	**V600090**	**PIN GROUP 1 C4x**	**1**	**pcs**
1	A13827	TRM1167	GREASE NIPPLE M8x1 DIRECT	8	pcs
2	A13618	TZN1017	HEX LOCK NUT M16 DIN985 10.9	8	pcs
3	A61154	TRE2165	PAN HEAD SCREW M16*40 DIN 7380	8	pcs
4	A19760	A19760	BEARING 50/55*50 WB802	8*	pcs
5	A29985	V600082	PIN D50*101	2	pcs
6	A28914	V600074	PIN D50*111	2	pcs
7	A28915	V600080	PIN D50*131	2	pcs
8	A28912	V600078	PIN D50*208	1	pcs
9	A28913	V600076	PIN D50*340	1	pcs

3.18 VAHVA GRAPPLE KC46 E4 NTP10

Part	Order code	Part No.	Name	Amount	Unit
	A29617	**V600650**	**VAHVA GRAPPLE KC46 E4 NTP10**	**1**	**pcs**
10	**A27273**	**V600425**	**PUSHROD C42/ C46, PL20**	**2**	**pcs**
11	**A70532**	**V600201**	**HYDRAULIC CYLINDER 110/63*331**	**1**	**pcs**
12	**A60336**	**V600410**	**FRAME KC42/C46 NTP10**	**1**	**pcs**
14	**A33842**	**V600620**	**OUTER GRAPPLE ARM C46 E4**	**1**	**pcs**
13	**A33841**	**V600630**	**INNER GRAPPLE ARM C46 E4**	**1**	**pcs**
	A61187	**V600690**	**PIN GROUP 4 C46 E4**	**1**	**pcs**
1	A13827	TRM1167	GREASE NIPPLE M8x1 DIRECT	8	pcs
2	A13618	TZN1017	HEX LOCK NUT M16 DIN985 10.9	8	pcs
3	A61154	TRE2165	PAN HEAD SCREW M16*40 DIN 7380	8	pcs
4	A19760	A19760	BEARING 50/55*50 WB802	8*	pcs
5	A29985	V600082	PIN D50*101	2	pcs
6	A28914	V600074	PIN D50*111	2	pcs
7	A28916	V600084	PIN D50*143	2	pcs

8	A28912	V600078	PIN D50*208	1	pcs
9	A28913	V600076	PIN D50*340	1	pcs
15	A32769	V600344	COVER PLATE, KC36 NTP10	3	pcs
16	TRT2123	TRT2123	HEX SCREW M12*30 DIN 933 10.9	6	pcs
17	A63344	TRT1247	HEX SCREW M24*70 DIN 933 8.8	2	pcs

3.19 VAHVA GRAPPLE KC46 E4 NTP20/30

Part	Order code	Part No.	Name	Amount	Unit
	A29618	**V600660**	**VAHVA GRAPPLE KC46 E4 NTP20/30**	**1**	**pcs**
	A61187	**V600690**	**PIN GROUP 4 C46 E4**	**1**	**pcs**
1	A13827	TRM1167	GREASE NIPPLE M8x1 DIRECT	8	pcs
2	A13618	TZN1017	HEX LOCK NUT M16 DIN985 10.9	8	pcs
3	A61154	TRE2165	PAN HEAD SCREW M16*40 DIN 7380	8	pcs
4	A19760	A19760	BEARING 50/55*50 WB802	8*	pcs
5	A29985	V600082	PIN D50*101	2	pcs
6	A28914	V600074	PIN D50*111	2	pcs
7	A28916	V600084	PIN D50*143	2	pcs
8	A28912	V600078	PIN D50*208	1	pcs
9	A28913	V600076	PIN D50*340	1	pcs
10	**A27273**	**V600425**	**PUSHROD C42/ C46, PL20**	**2**	**pcs**
11	**A70532**	**V600201**	**HYDRAULIC CYLINDER 110/63*331**	**1**	**pcs**
12	**A60337**	**V600891**	**FRAME KC42/C46 NTP20/30**	**1**	**pcs**
14	**A33842**	**V600620**	**OUTER GRAPPLE ARM C46 E4**	**1**	**pcs**
13	**A33841**	**V600630**	**INNER GRAPPLE ARM C46 E4**	**1**	**pcs**
15	A32769	V600344	COVER PLATE KC36 NTP10	3	pcs
16	TRT2123	TRT2123	HEX SCREW M12*30 DIN 933 10.9	6	pcs
17	A63344	TRT1247	HEX SCREW M24*70 DIN 933 8.8	2	pcs

3.20 VAHVA GRAPPLE KC46 E4 S60

Part	Order code	Part No.	Name	Amount	Unit
	A29619	**V600670**	**VAHVA GRAPPLE KC46 E4 S60**	**1**	**pcs**
	A61187	**V600690**	**PIN GROUP 4 C46 E4**	**1**	**pcs**
1	A13827	TRM1167	GREASE NIPPLE M8x1 DIRECT	8	pcs
2	A13618	TZN1017	HEX LOCK NUT M16 DIN985 10.9	8	pcs
3	A61154	TRE2165	PAN HEAD SCREW M16*40 DIN 7380	8	pcs
4	A19760	A19760	BEARING 50/55*50 WB802	8*	pcs
5	A29985	V600082	PIN D50*101	2	pcs
6	A28914	V600074	PIN D50*111	2	pcs
7	A28916	V600084	PIN D50*143	2	pcs
8	A28912	V600078	PIN D50*208	1	pcs
9	A28913	V600076	PIN D50*340	1	pcs

10	**A27273**	**V600425**	**PUSHROD C42/ C46, PL20**	**2**	**pcs**
11	**A70532**	**V600201**	**HYDRAULIC CYLINDER 110/63*331**	**1**	**pcs**
12	**A60338**	**V600881**	**FRAME KC42/C46 S60**	**1**	**pcs**
14	**A33842**	**V600620**	**OUTER GRAPPLE ARM C46 E4**	**1**	**pcs**
13	**A33841**	**V600630**	**INNER GRAPPLE ARM C46 E4**	**1**	**pcs**

3.21 VAHVA GRAPPLE KC46 E4 S70

Part	Order code	Part No.	Name	Amount	Unit
	A29620	**V600680**	**VAHVA GRAPPLE KC46 E4 S70**	**1**	**pcs**
	A61187	**V600690**	**PIN GROUP 4 C46 E4**	**1**	**pcs**
1	A13827	TRM1167	GREASE NIPPLE M8x1 DIRECT	8	pcs
2	A13618	TZN1017	HEX LOCK NUT M16 DIN985 10.9	8	pcs
3	A61154	TRE2165	PAN HEAD SCREW M16*40 DIN 7380	8	pcs
4	A19760	A19760	BEARING 50/55*50 WB802	8*	pcs
5	A29985	V600082	PIN D50*101	2	pcs
6	A28914	V600074	PIN D50*111	2	pcs
7	A28916	V600084	PIN D50*143	2	pcs
8	A28912	V600078	PIN D50*208	1	pcs
9	A28913	V600076	PIN D50*340	1	pcs
10	**A27273**	**V600425**	**PUSHROD C42/ C46, PL20**	**2**	**pcs**
11	**A70532**	**V600201**	**HYDRAULIC CYLINDER 110/63*331**	**1**	**pcs**
12	**A60339**	**V600871**	**FRAME KC42/C46 S70**	**1**	**pcs**
14	**A33842**	**V600620**	**OUTER GRAPPLE ARM C46 E4**	**1**	**pcs**
13	**A33841**	**V600630**	**INNER GRAPPLE ARM C46 E4**	**1**	**pcs**

3.22 VAHVA REMOVAL JAWS for C42 E9 GRAPPLE

Part	Order code	Part No.	Name	Amount	Unit
	A29474	**V600980**	**VAHVA REMOVAL JAWS with C42 E9 GRAPPLE**	**1**	**pcs**
	V600960	**V600960**	**OUTER REMOVAL JAW C42 E9 / CONFIGURATION**	**1**	**pcs**
38	A60380	V600968	TUBE, D80/65 LENGTH 970	1	pcs
31	A60373	V600961	OUTER REMOVAL JAW KC42 E9 / WELDED	1	pcs
	A60374	**V600970**	**INNER REMOVAL JAW C42 E9 / CONFIGURATION**	**1**	**pcs**
39	A60381	V600978	TUBE D80/65 LENGHT 767	1	pcs
30	A60374	V600971	INNER REMOVAL JAW KC42 E9 / WELDED	1	pcs
32	A60379	V600982	FASTENER	4	pcs
33	A30389	**V600981**	**WEAR PLATE**	**2**	**pcs**
36		TZA1020	WASHER M20 DIN 125	26	pcs
36		TZN1020	HEX LOCK NUT M20 DIN 985 8.8	18	pcs
35	A13693	TRG2070	PAN HEAD SCREW M20*70 DIN 7991 10.9	10	pcs

34		TRE1218	HEXAGON SOCET HEAD CAP SCREW M20*180 DIN 933 8.8	8	pcs

3.23 VAHVA GRAPPLE C50

Part	Order code	Part No.	Name	Amount	Unit
	A97991	**V609000**	**VAHVA GRAPPLE C50**	**1**	**pcs**
	A61185	**V600090**	**PIN GROUP 1 C4x**	**1**	**pcs**
1	A13827	TRM1167	GREASE NIPPLE M8x1 DIRECT	8	pcs
2	A13618	TZN1017	HEX LOCK NUT M16 DIN985 10.9	8	pcs
3	A61154	TRE2165	PAN HEAD SCREW M16*40 DIN 7380	8	pcs
4	A19760	A19760	BEARING 50/55*50 WB802	8*	pcs
5	A29985	V600082	PIN D50*101	2	pcs
6	A28914	V600074	PIN D50*111	2	pcs
7	A28915	V600080	PIN D50*131	2	pcs
8	A28912	V600078	PIN D50*208	1	pcs
9	A28913	V600076	PIN D50*340	1	pcs
10	**A27273**	**V600425**	**PUSHROD C42/ C46, PL20**	**2**	**pcs**
11	**A70532**	**V600201**	**HYDRAULIC CYLINDER 110/63*331**	**1**	**pcs**
12	**A60335**	**V600010**	**FRAME C42/C46/C50**	**1**	**pcs**
13	**A104647**	**V609030**	**INNER GRAPPLE ARM C50**	**1**	**pcs**
14	**A104645**	**V609020**	**OUTER GRAPPLE ARM C50**	**1**	**pcs**

3.24 VAHVA GRAPLE C60 HD

Part	Ordering code	Part No	Name	Pc	Unit
	A62127	**V604050**	**VAHVA GRAPLE C60 HD**	**1**	**pcs**
12	**A59957**	**V600610**	**FRAME C42/C46 HD**	**1**	**pcs**
14	**A65622**	**V604020**	**OUTER GRAPLE C60**	**1**	**pcs**
13	**A65623**	**V604030**	**INNER GRAPLE C60**	**1**	**pcs**
	A66033	**V604090**	**PIN GROUP 7 C60**	**1**	**pcs**
1	A13827	TRM1167	GREASE NIPPLE M8x1 DIRECT	12	pcs
2	A13618	TZN1016	HEXAGON LOCK NUT M16 DIN 985 8.8	8	pcs
3	A65404	TRE2166	LOCK HEAD SCREW 16*50 DIN 603	8	pcs
4	A19760	A19760	BEARING 50/55*50 WB802	8*	pcs
5	A28914	V600074	PIN D50*111	2	pcs
5**	A66032	V604043	PLATE 05, FERRULE D90/50x5	4	pcs
6	A28915	V600080	PIN D50*131	2	pcs
6**	A66028	V604039	FERRULE D90/50...10	2	pcs
7	A66030	V604093	PIN D50*154	2	pcs
7**	A66029	V604029	FERRULE D90/50...40	2	pcs
8	A66031	V604091	PIN D50*184	1	pcs
9	A28913	V600076	PIN D50*340	1	pcs

11	**A70532**	**V600201**	**HYDRAULIC SYLINDER 110/63*331**	**1**	**pcs**
10	**A27273**	**V600425**	**PUSHROD C42/ C46, PL20**	**2**	**pcs**

In addition, all models include:					
	A65523	V600310	STICKER, VAHVA	2	pcs
	A60243	V600325	STICKER “Danger of compression”	1	pcs
	A60242	V600324	STICKER “Danger of oil splashes”	1	pcs

Other parts (accessories / repair kits):					
	A05963	A05963	Seal Kit 110/63 Vahva C42/46 Cylinder	1	pcs

* In addition, the cylinder contains 4 pcs of bearings.
** The ferrule enters that pin.

4 Hydraulic cylinder repair

4.1 Hydraulic cylinder removal and installation

1. Place the grapple in closed position, lower the loader on a level surface. Make sure the loader stays in place.
2. Disconnect the hydraulic hoses and plug the connections.
3. Remove the pivot pins locking bolts.
4. Knock out the pivot pins. Use a mass hammer and a suitable knockout mandrel.
5. Configuration in reverse order. Make sure that the cylinder goes in the right direction.

4.2 Hydraulic cylinder seals replacement
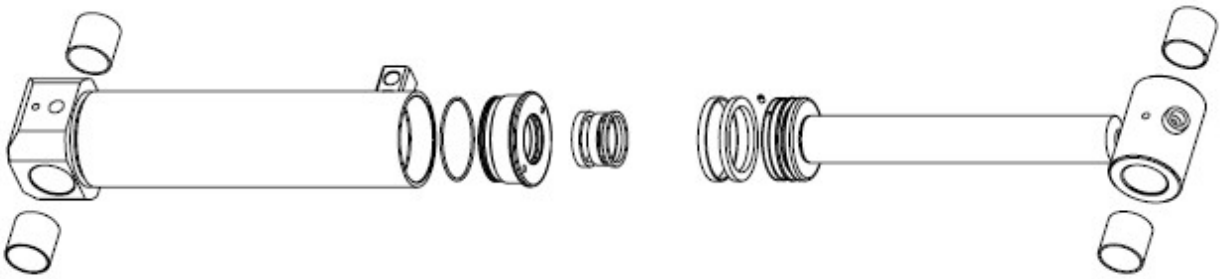
1. Drain the oil from the cylinder.
2. Squeeze the cylinder firmly at its lower end into an upright position and open the muzzle using a cylinder tool.
3. Lift off the piston rod.
4. Remove the piston using a special tool. The piston is glued with a screw lock. You may have to heat it to open.
5. Check the order of the seals before disassembling and make sure you have the correct gasket set. Remove old seals.
6. Install the new seals in the correct orientation and order, lubricate them when installing.
7. Assemble the cylinder in reverse order.